Food Prep Tables - Pizza Prep
Super Deluxe Series

PIZZA PREP TABLES - Drawers

EXCEPTIONAL 2 YEAR PARTS & LABOR WARRANTY

TPR-44SD-D2

TPR-67SD-D2

TPR-67SD-D4

TPR-93SD-D2

TPR-93SD-D4

TPR-93SD-D6

- Drawer pans not included.

FEATURES & BENEFITS

Stainless Steel Cabinet Construction
The Turbo Air Super Deluxe model boasts a stainless steel interior and exterior (galvanized steel back & bottom). It guarantees the utmost in cleanliness and long product life. The Super Deluxe can add a touch of style to the most refined setting.

Durable Stainless Steel Drawers
Drawers are easy to clean and assemble.

Extra Deep Cutting Board
Our cutting board is 19 1/4" deep and 1/2" thick to provide ample working space, and is made of easy to use and sanitize LDPE (Low Density Polyethylene). The new side rail cutting board bracket makes it easy to secure and remove the cutting board.

Front Breathing, Side Mount Compressor Unit
Through positioning the compressor to the side, the refrigerator can be serviced without being moved. By innovatively creating a front breathing feature, this model can provide high efficiency in narrow spaces.

Insulated Pan Cover

High-Density Polyurethane Insulation
The entire cabinet structure and solid doors are foamed-in-place using high density, CFC free polyurethane insulation.

Efficient Refrigeration System
Turbo Air's solid door refrigerators are designed with oversized and balanced (CFC Free R-134A) refrigeration systems. These include efficient evaporators and condensers for faster cooling and greater efficiency.

Excellent Cooling System
The powerful forced-air refrigeration system maintains the storage cabinet at a constant temperature. The evaporator fan and a newly designed stainless steel louver allow uniform distribution of cold air over the food pans and throughout the unit to keep food fresher longer.

Ergonomically Designed Doors & Drawers
Customers' fatigue fades away with easy door grip and drawers that open effortlessly. These features along with self-closing doors make this the ultimate choice in customer convenience. ABS sheet door liners resist water condensation with thermal efficiency.

Magnetic Door Gaskets
Magnetic door and drawer gaskets are of one piece construction, removable without tools for ease of cleaning and replacement.

Refrigerator Holds 33°F ~ 41°F for the Best in Food Preservation

Model	Swing Door	Drawers	CU./FT.	#of Shelves	#of Pans	HP	AMPS	Crated Weight (lbs.)	L x D* x H† (inches)
TPR-44SD-D2	-	2	14	-	6	1/4	6.3	321	44 x 32 1/4 x 36
TPR-67SD-D2	1	2	20	2	9	2/3	10.4	561	67 x 32 1/4 x 36
TPR-67SD-D4	-	4	20	-	9	2/3	10.4	572	67 x 32 1/4 x 36
TPR-93SD-D2	2	2	31	4	12	2/3	11	711	93 x 32 1/4 x 36
TPR-93SD-D4	1	4	31	2	12	2/3	11	722	93 x 32 1/4 x 36
TPR-93SD-D6	-	6	31	-	12	2/3	11	733	93 x 32 1/4 x 36

* Depth does not include 3" for cutting boards and 1" for rear spacers. † Height does not include 5-7/8" for caster height.

TPR MODELS **SPECIFICATIONS**

ELECTRICAL DATA	TPR-44SD-D2	TPR-67SD-D2	TPR-67SD-D4	TPR-93SD-D2	TPR-93SD-D4	TPR-93SD-D6
Voltage	115/60/1	115/60/1	115/60/1	115/60/1	115/60/1	115/60/1
Plug Type	NEMA-5-15P	NEMA-5-15P	NEMA-5-15P	NEMA-5-15P	NEMA-5-15P	NEMA-5-15P
Full Load Amperes	6.3	10.4	10.4	11	11	11
Compressor HP	1/4	2/3	2/3	2/3	2/3	2/3
Cord Length ft.	9	9	9	9	9	9
Refrigerant	R-134A	R-134A	R-134A	R-134A	R-134A	R-134A
DIMENSIONAL DATA						
Ext. Length Overall in.	44 (1118mm)	67 (1702mm)	67 (1702mm)	93 (2362mm)	93 (2362mm)	93 (2362mm)
Ext. Depth Overall in.*	32 1/4 (819mm)	32 1/4 (819mm)	32 1/4 (819mm)	32 1/4 (819mm)	32 1/4 (819mm)	32 1/4 (819mm)
Ext. Height Overall in.†	36 (914mm)	36 (914mm)	36 (914mm)	36 (914mm)	36 (914mm)	36 (914mm)
# of Doors	-	1	-	2	1	-
# of Shelves	-	2	-	4	2	-
# of Pans	6	9	9	12	12	12
Net Capacity cu. ft.	14	20	20	31	31	31
Gross Weight lbs.	321	561	572	711	722	733
Net Weight lbs.	266	407	418	601	612	623

Design and specifications subject to change without notice.
Actual shipping weight may differ due to extra packing materials for product protection.
* Depth does not include 3" for cutting boards and 1" for rear spacers. † Height does not include 5-7/8" for caster height.

- **WARRANTY :** Exceptional 2 Year Parts and Labor Warranty
  Additional 3 Year Warranty on Compressor

- Self-Contained System
- 4" Dia. Swivel Casters
- Standard 1/3 Size, 6" Deep Condiment Pans Included (top of cabinet)
- 19 1/4" Deep, 1/2" Thick Cutting Board Included
- 2.5" Dia. Casters Available (optional)
- Legs Available for All Models (optional)

PLAN VIEW

(unit : inch)

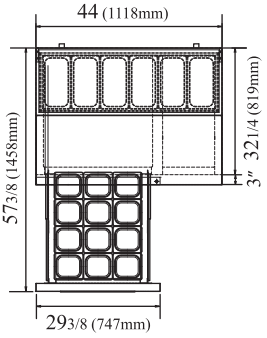

TPR-44SD-D2
TOP VIEW

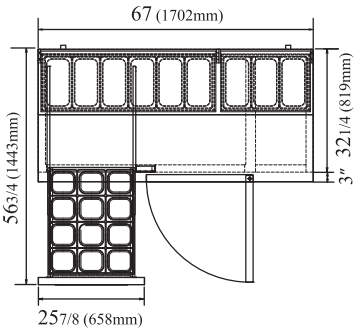

TPR-67SD-D2
TOP VIEW

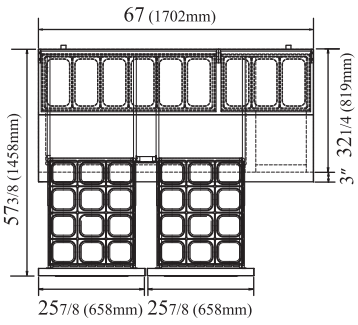

TPR-67SD-D4
TOP VIEW

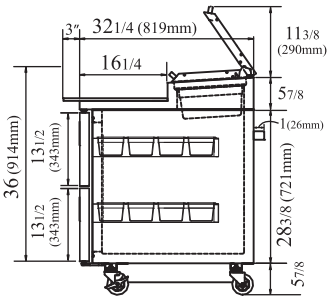

SIDE VIEW

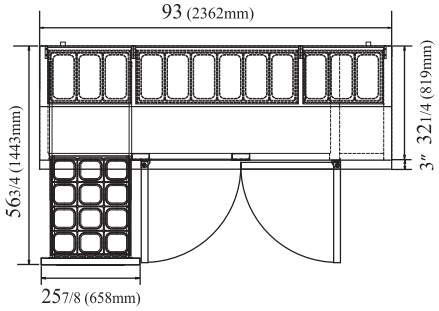

TPR-93SD-D2
TOP VIEW

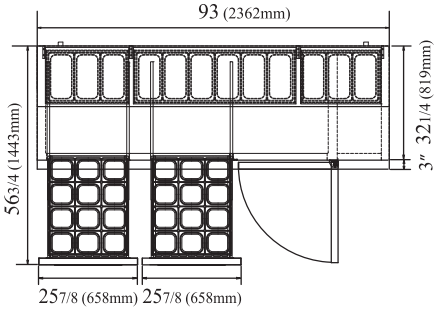

TPR-93SD-D4
TOP VIEW

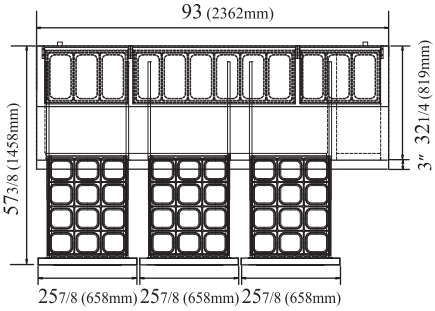

TPR-93SD-D6
TOP VIEW